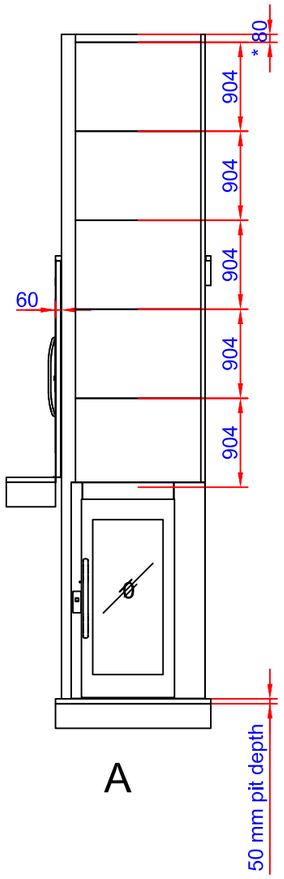

A

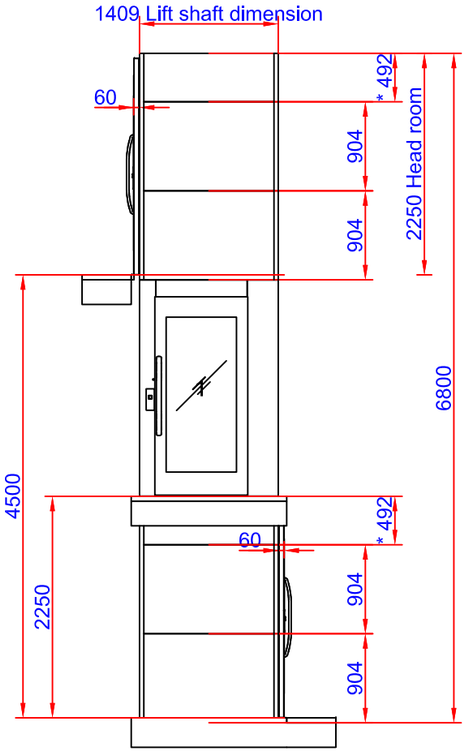

B

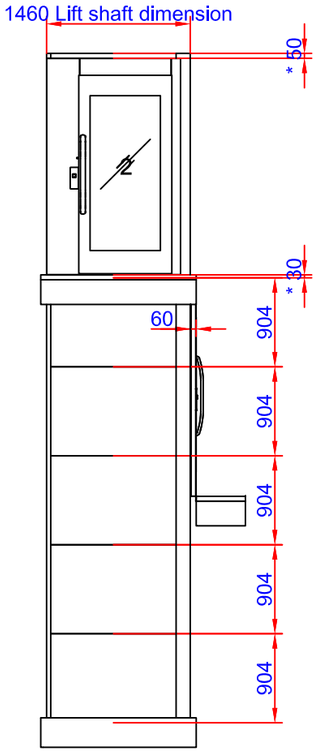

C

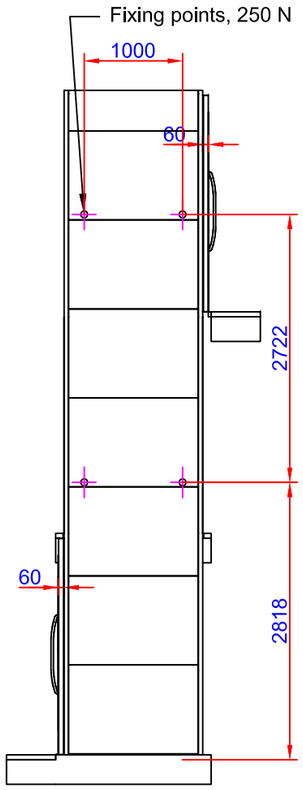

D

*To be adapted on site
**Customized panel

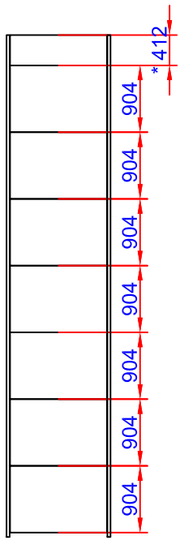

E

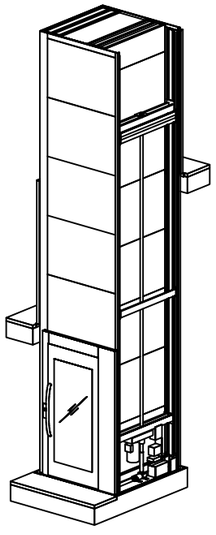

Positioning of machinery:

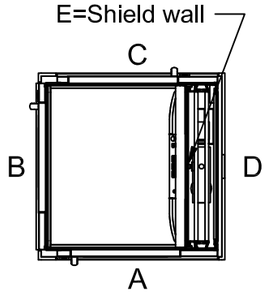

Options

Frekv 1x230/240V 50-60Hz 16 A Soft

Capacity: 400,00 kg

Approved by builder:

European view placement:

CIBES Uplifting Design

Tender no	Principal drawing A5000 - 1100*1367 Shaft drawing		
Order no			
Gen. Tolerances	Date	sheet	Scale:
SS-ISO 27681-1 m	2018-11-01	1 of 7	A3, 1:60

Shaft cutout sizes

Lift unit installed within a shaft by others

Door front cutout sizes		
Landing	Width	Height
A 0	1530	2250
B 1	1530	2250
C 2	1530	2250

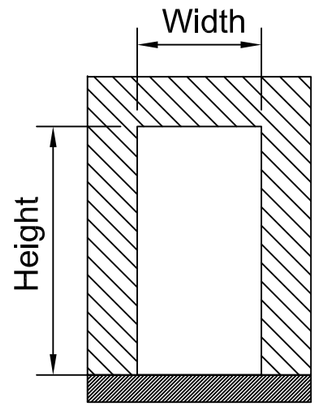

Door cut out

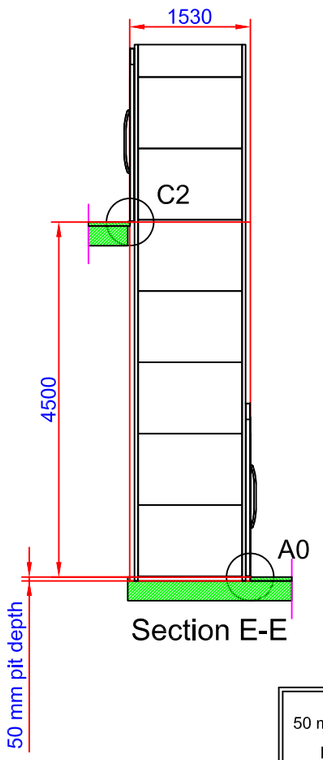

Section E-E

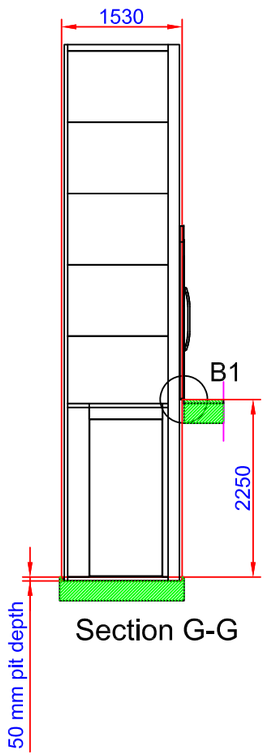

Section G-G

50 mm pit depth + 10 mm, - 0 mm.
Bottom surface must be flat

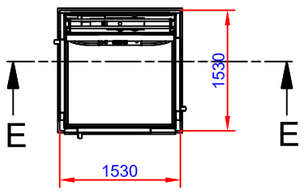

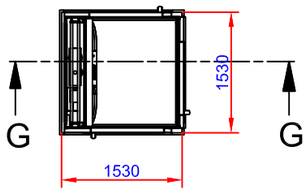

C2 (1:10)

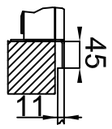

A0 (1:10)

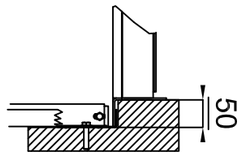

B1 (1:10)

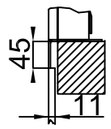

Approved by builder:

European view placement:

CIBES Uplifting Design

Tender no	Principal drawing A5000 - 1100*1367 Cut out sizes		
Order no			
Gen. Tolerances	Date	sheet	Scale:
SS-ISO 27681-1 m	2018-11-01	2 of 7	A3, 1:60

Loads sustained by shaft and plattform
and fixing points bottom frame

L section force: 6,54 kN
L section load: 21,44 kN/m²

Mast force: 7,32 kN
Mast load: 59,03 kN/m²

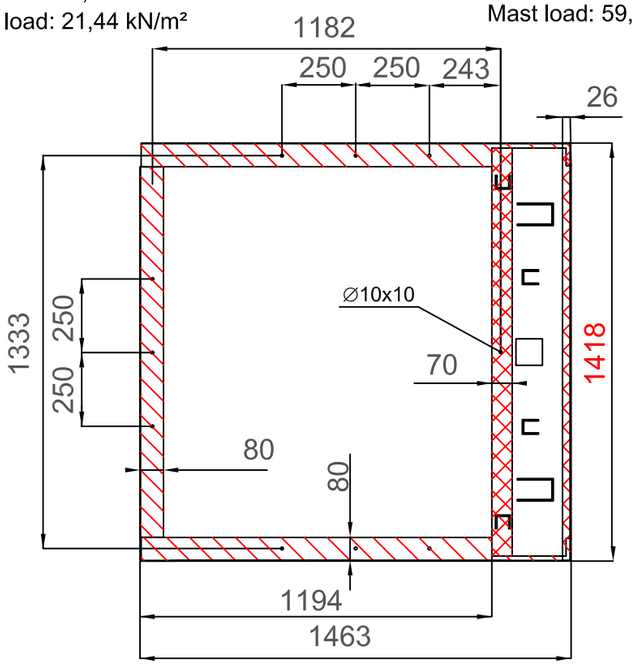

Scale: 1:20

Recommended positioning of fixing points.
Loads per fixing point, F=250 N

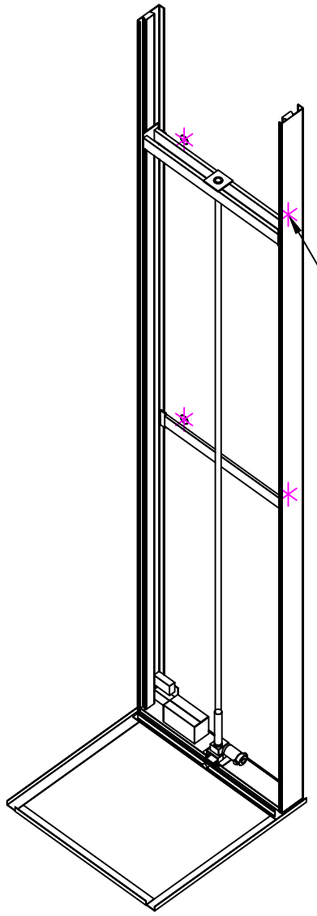

A (1 : 5)

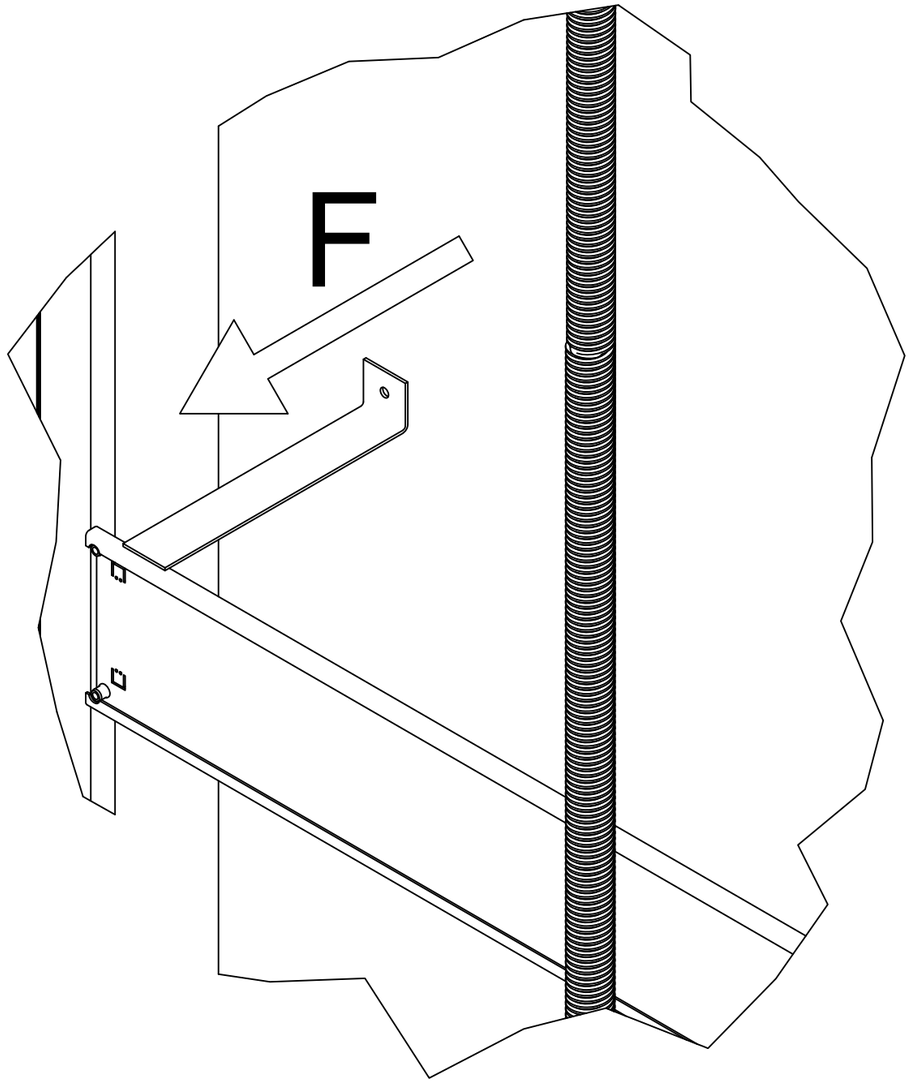

Approved by builder: _____	CIBES Uplifting Design	Tender no	Principal drawing A5000 - 1100*1367 Loads and forces		
		Order no			
European view placement:		Gen. Tolerances SS-ISO 27681-1 m	Date 2018-11-01	sheet 3 of 7	Scale: A3, 1:60

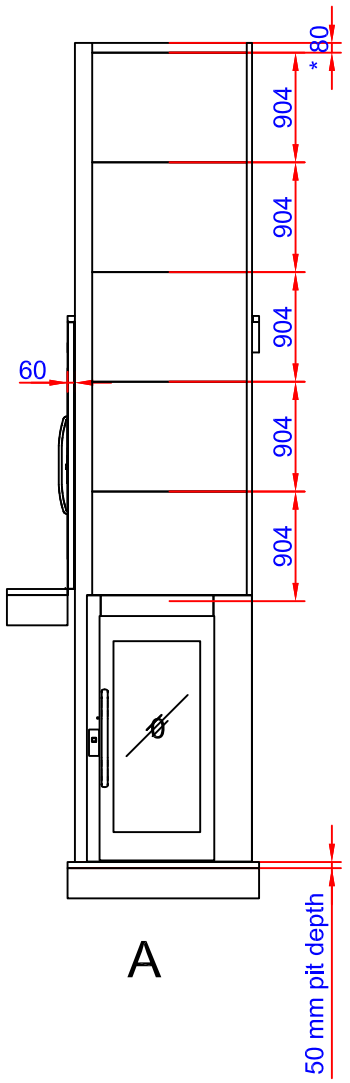

A

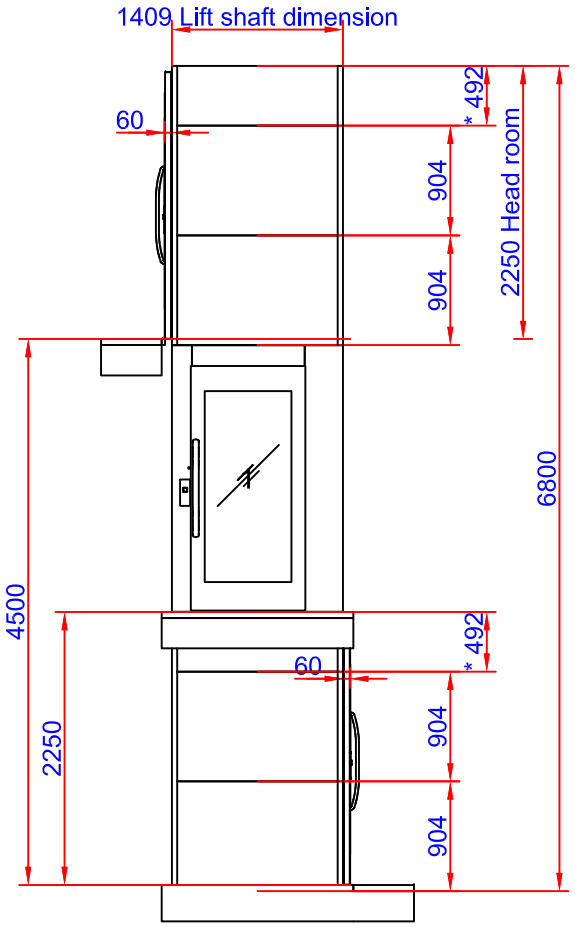

B

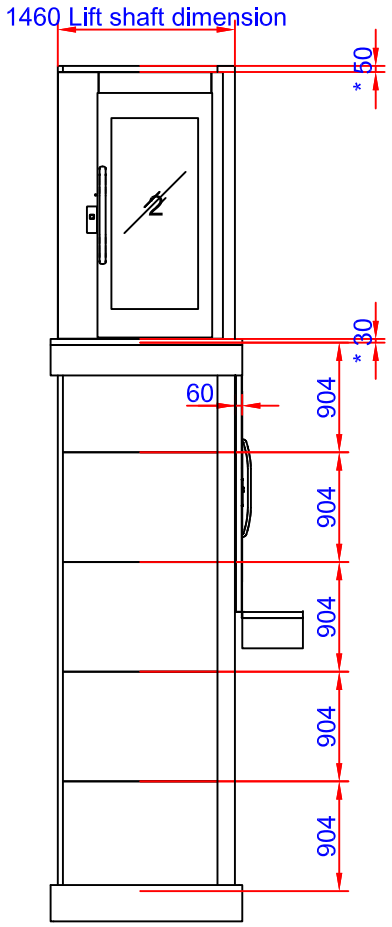

C

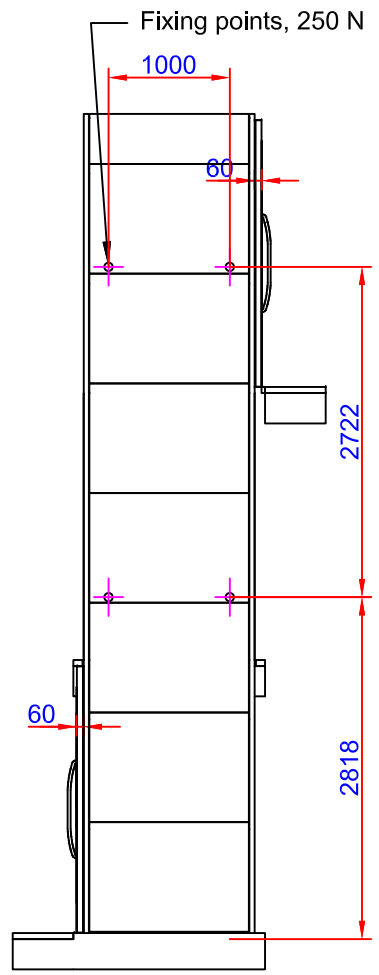

D

*To be adapted on site
**Customized panel

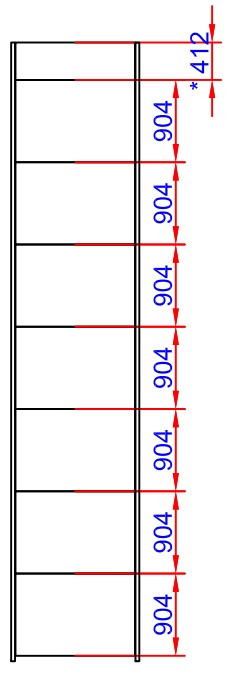

E

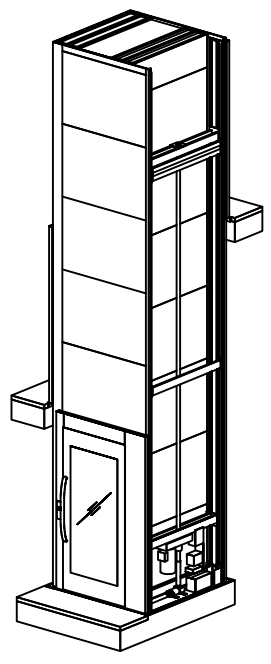

Positioning of machinery:

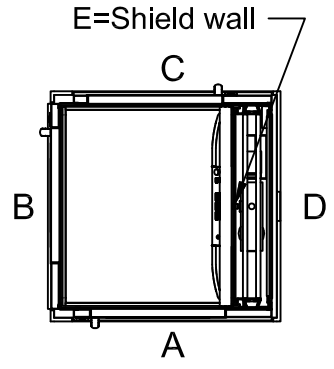

Options

Frekv 1x230/240V 50-60Hz 16 A Soft

Capacity: 400,00 kg

Approved by builder:

European view placement:

CIBES Uplifting Design

Tender no	Principal drawing A5000 - 1100*1367 Shaft drawing		
Order no			
Gen. Tolerances	Date	sheet	Scale:
SS-ISO 27681-1 m	2018-11-01	1 of 7	A3, 1:60

Shaft cutout sizes

Lift unit installed within a shaft by others

Door front cutout sizes		
Landing	Width	Height
A 0	1530	2250
B 1	1530	2250
C 2	1530	2250

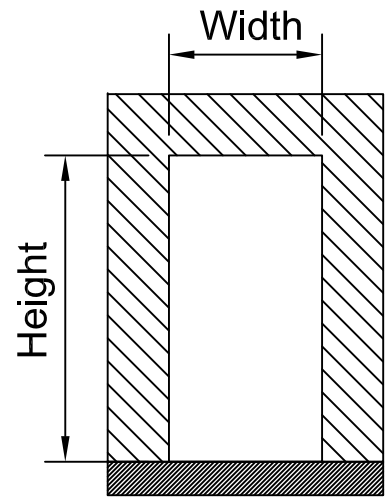

Door cut out

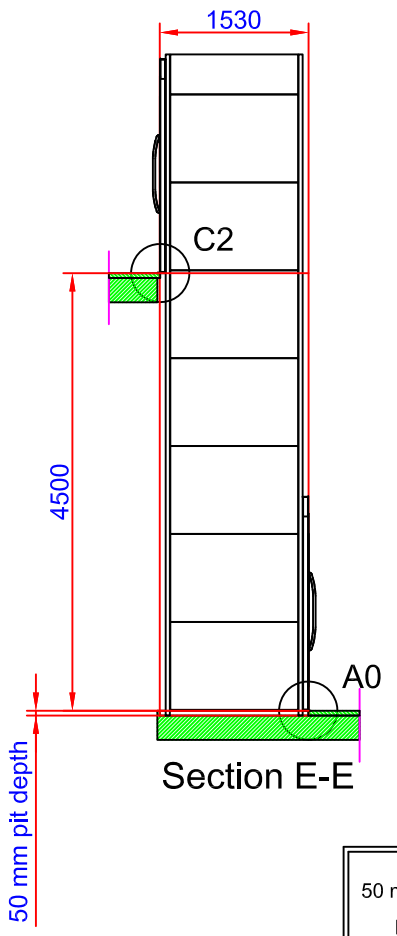

Section E-E

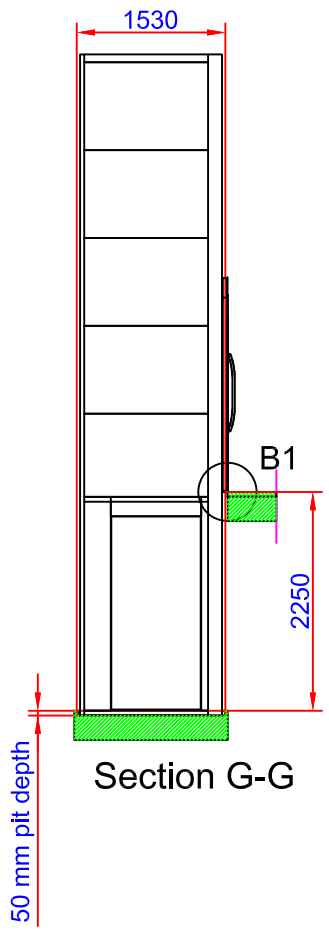

Section G-G

50 mm pit depth + 10 mm, - 0 mm.
Bottom surface must be flat

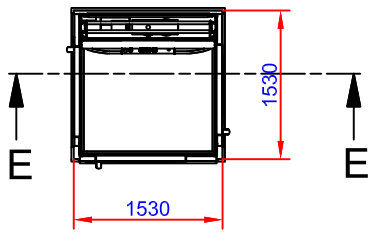

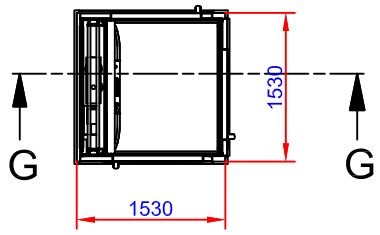

C2 (1:10)

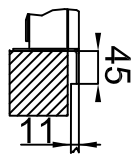

A0 (1:10)

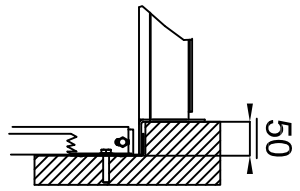

B1 (1:10)

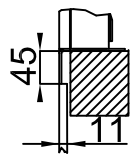

Approved by builder:

European view placement:

CIBES Uplifting Design

Tender no	Principal drawing A5000 - 1100*1367 Cut out sizes		
Order no			
Gen. Tolerances	Date	sheet	Scale:
SS-ISO 27681-1 m	2018-11-01	2 of 7	A3, 1:60

Loads sustained by shaft and plattform
and fixing points bottom frame

L section force: 6,54 kN
L section load: 21,44 kN/m²

Mast force: 7,32 kN
Mast load: 59,03 kN/m²

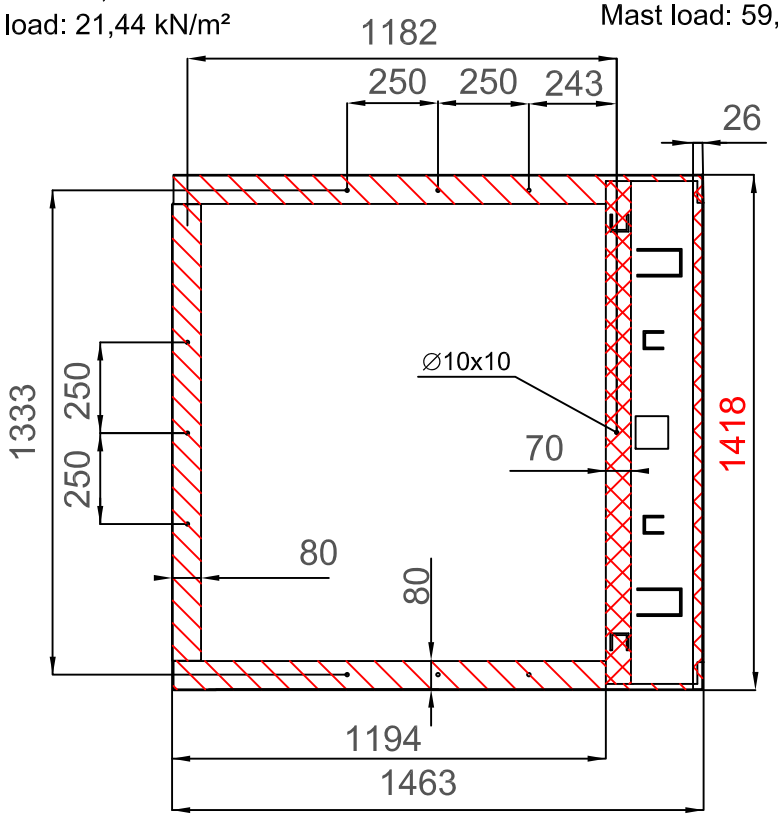

Scale: 1:20

Recommended positioning of fixing points.
Loads per fixing point, F=250 N

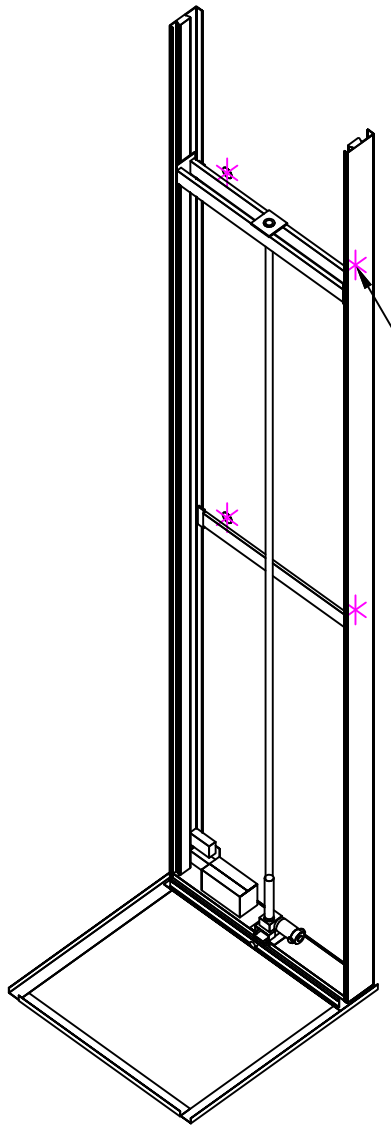

A (1 : 5)

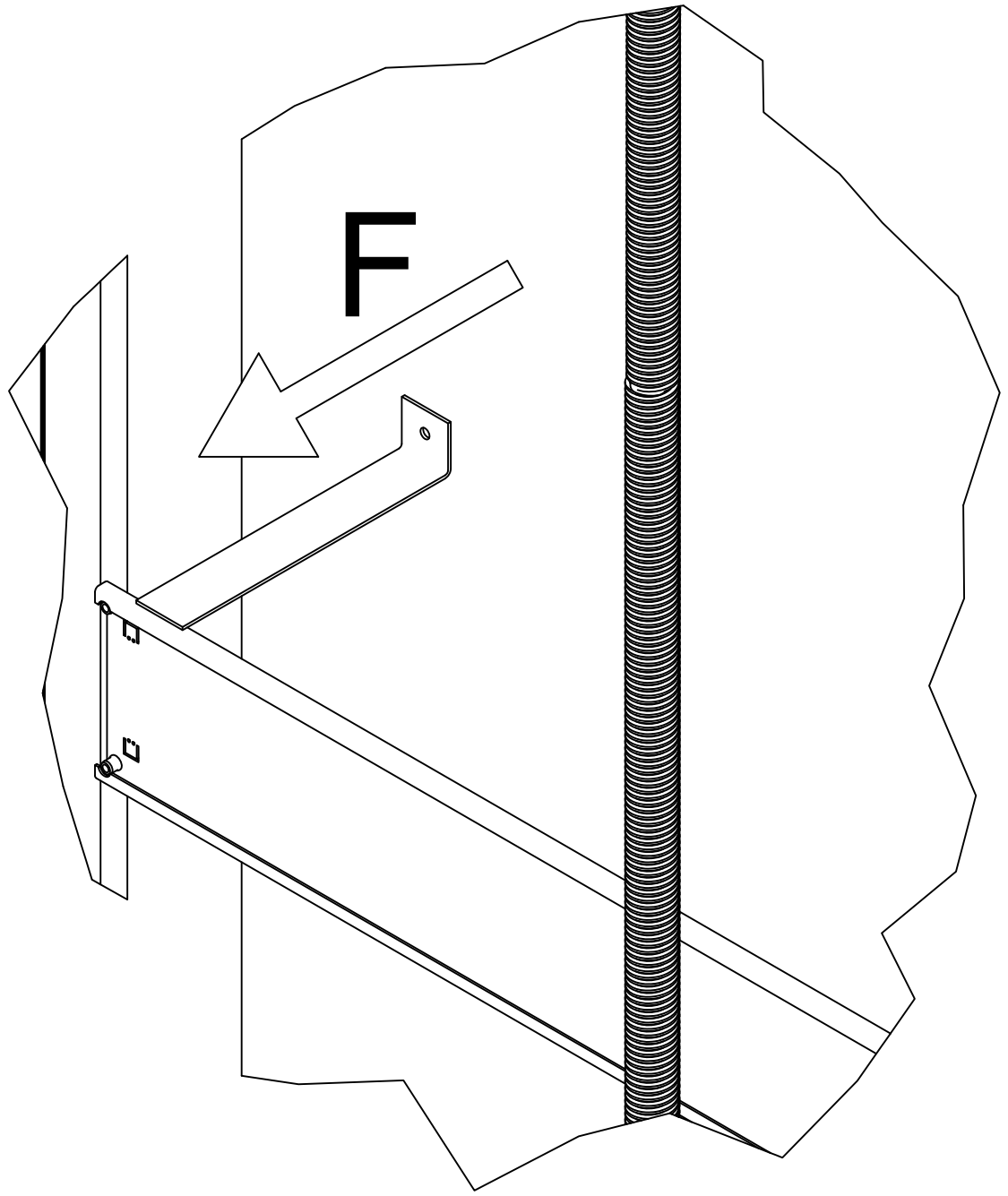

Approved by builder: _____	CIBES Uplifting Design	Tender no	Principal drawing A5000 - 1100*1367 Loads and forces		
		Order no			
European view placement:		Gen. Tolerances SS-ISO 27681-1 m	Date 2018-11-01	sheet 3 of 7	Scale: A3, 1:60